

MINI A

Item code	86.D104.5321.02
Product type	Indoor
Category	Downlights
Family	MINI
Subfamily	MINI A
Pictograms	CRI 90 · CE · Driver INCL. · On Off · DALI · IP 20

Dimensions	
Product dimensions (mm)	ø50*H153mm

Product	
Real power (W)	10
Real luminous flux (Lm)	840
Luminous efficiency (Lm/W)	84
Beam angle (º)	24
Life time (h)	50000 h L80B10
IP	20
Control gear	ON/OFF
Colour temperature (K)	3000
Colour consistency (SDCM)	SDCM3
CRI	90

Scheme

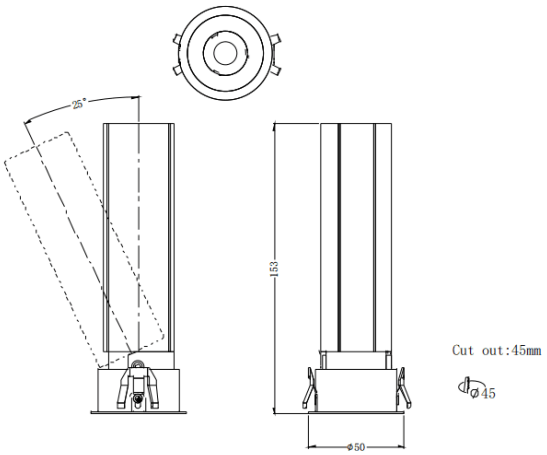

Photometry

